Poly Flex
BRISBANE AUSTRALIA

POLY FLEX DATA SHEET

PRODUCT: MOUNT P–SYSTEM®

MODEL: P#8.4CTF90–30–24

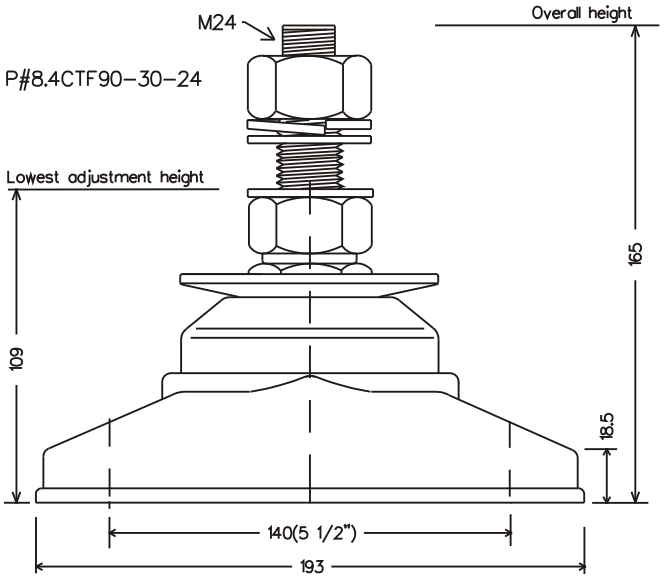

IDENTIFICATION SYSTEM
P#⊠F⊠⊠–⊠⊠–⊠⊠ (⊠⊠)
BASE TYPE · CORE DIA. · CORE HEIGHT · THREAD SIZE · CORE HARDNESS

CORE COLOUR	SHORE HARDNESS
ORANGE	50
BLUE	60
YELLOW	70
LIGHT GREEN	80

MATERIAL SPECIFICATION
• ENGINEERING GRADE HEAT CURED POLYMER ALLOY
• ALL METAL PARTS – GOLD PASSIVATED ZINC PLATED

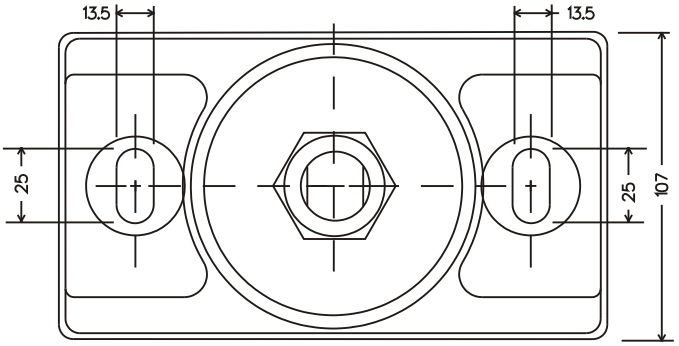

Dimensions are in mm.

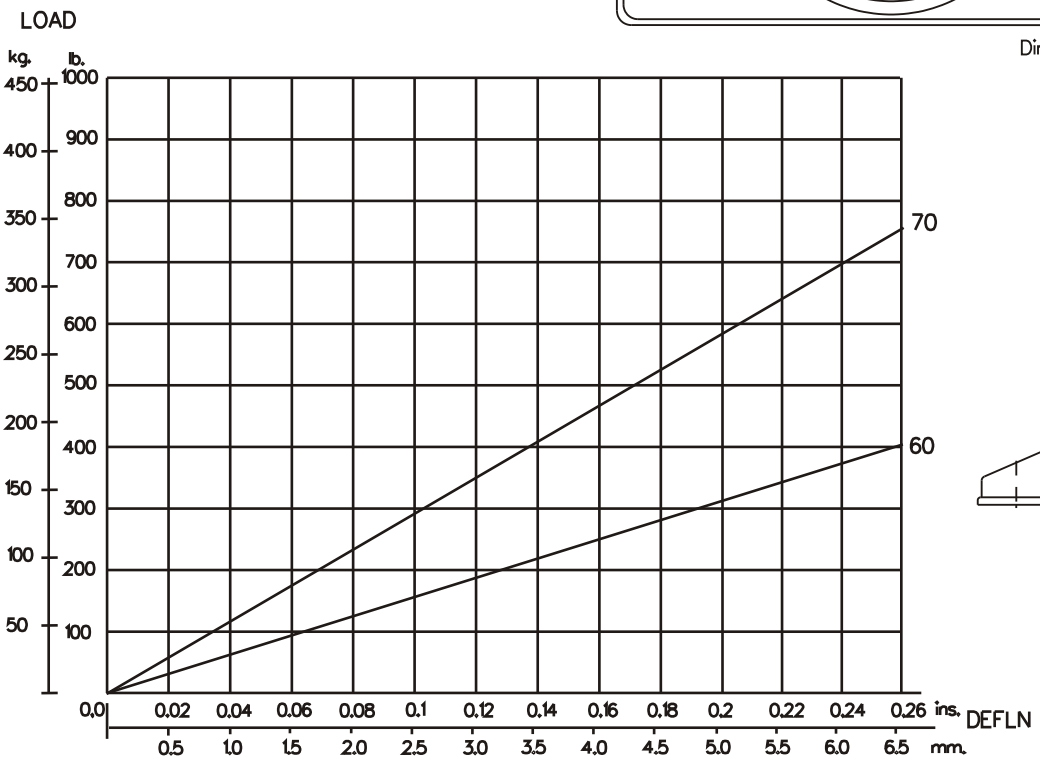

GRAPH 1 : STATIC AXIAL(VERTICAL) LOAD VS. DEFLECTION

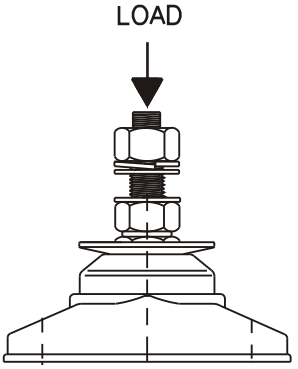

Poly Flex Products ©2003

DRAWING NO: D8–4CF24
DRAWN PB. 7-4-03

Poly Flex
BRISBANE AUSTRALIA
A.C.N. 010 805 642

26-28 Tubbs Street, Clontarf, Queensland 4019. Australia.
Ph: 07-3284-2799 Fax: 07-3284-2672 : Int code prefix 617
Email: info@polyflex.com.au
Home Page: www.polyflex.com.au