Poly Flex
BRISBANE AUSTRALIA
A.C.N. 010 805 642

26 Tubbs Street.
Clontarf, Queensland 4019
Australia.

Ph: (07) 3284-2799 Fax: (07) 3284-2672
International code +617

DATA SHEET

PRODUCT:MOUNT P-SYSTEM®
MODEL: P#10SQ100-20-20

MATERIAL SPECIFICATION
* ENGINEERING GRADE HEAT CURED POLYMER ALLOY
* ALL METAL PARTS - GOLD PASSIVATED ZINC PLATED

IDENTIFICATION SYSTEM

P#⊠F⊠⊠-⊠⊠-⊠⊠ (⊠⊠)

BASE TYPE | CORE DIA. | CORE HEIGHT | THREAD SIZE | CORE HARDNESS

CORE COLOUR	SHORE HARDNESS
ORANGE	50
BLUE	60
YELLOW	70

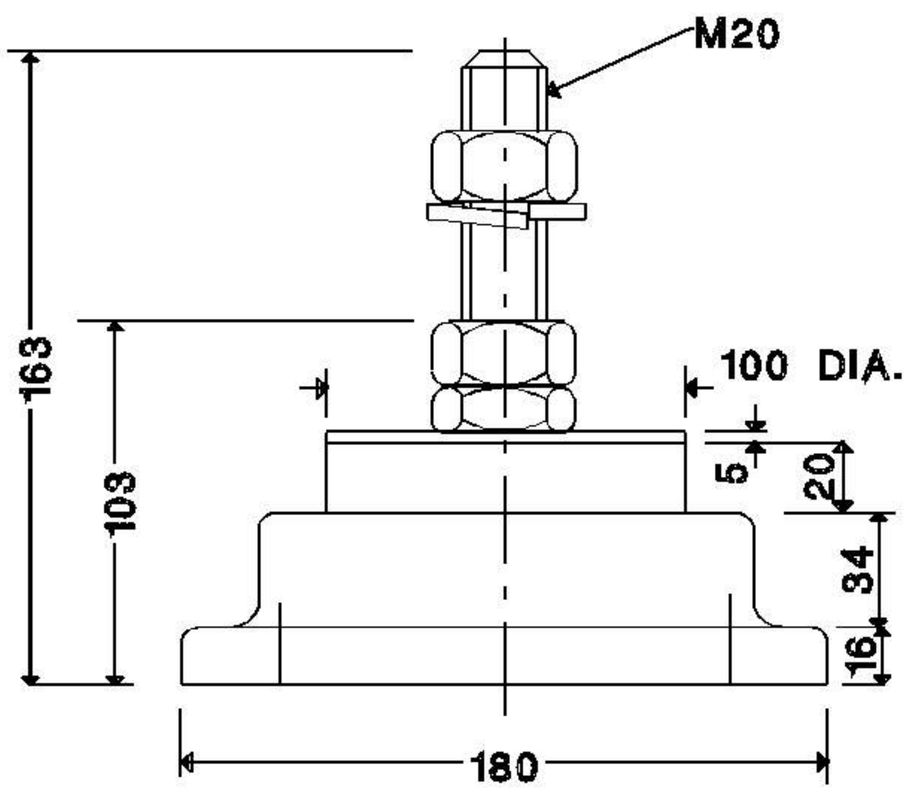

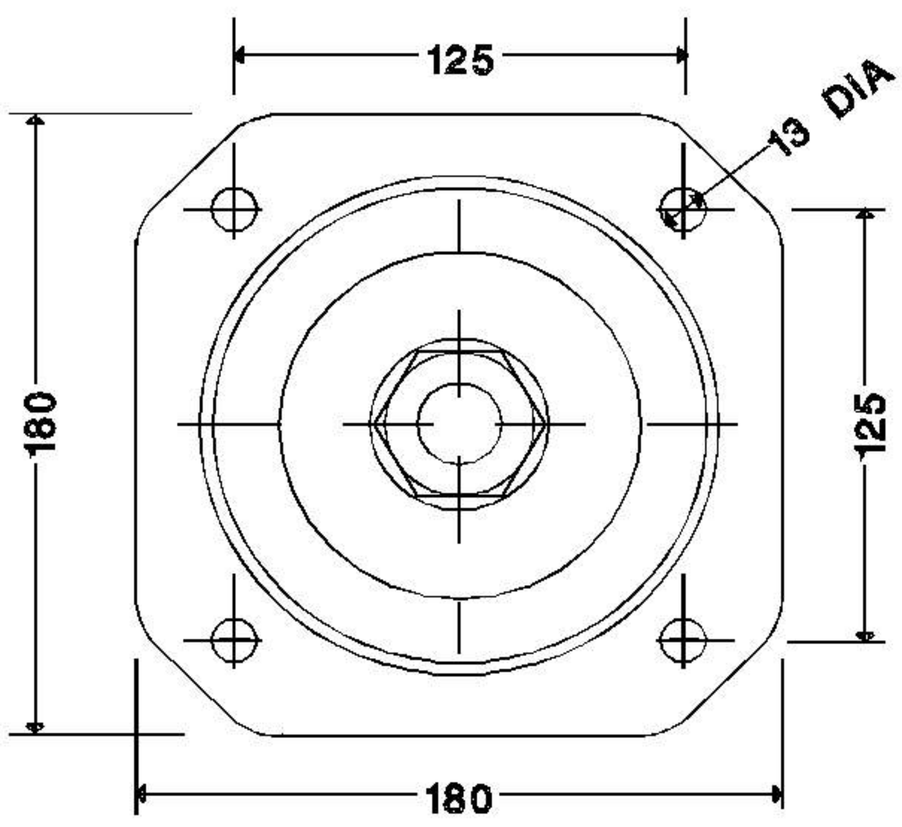

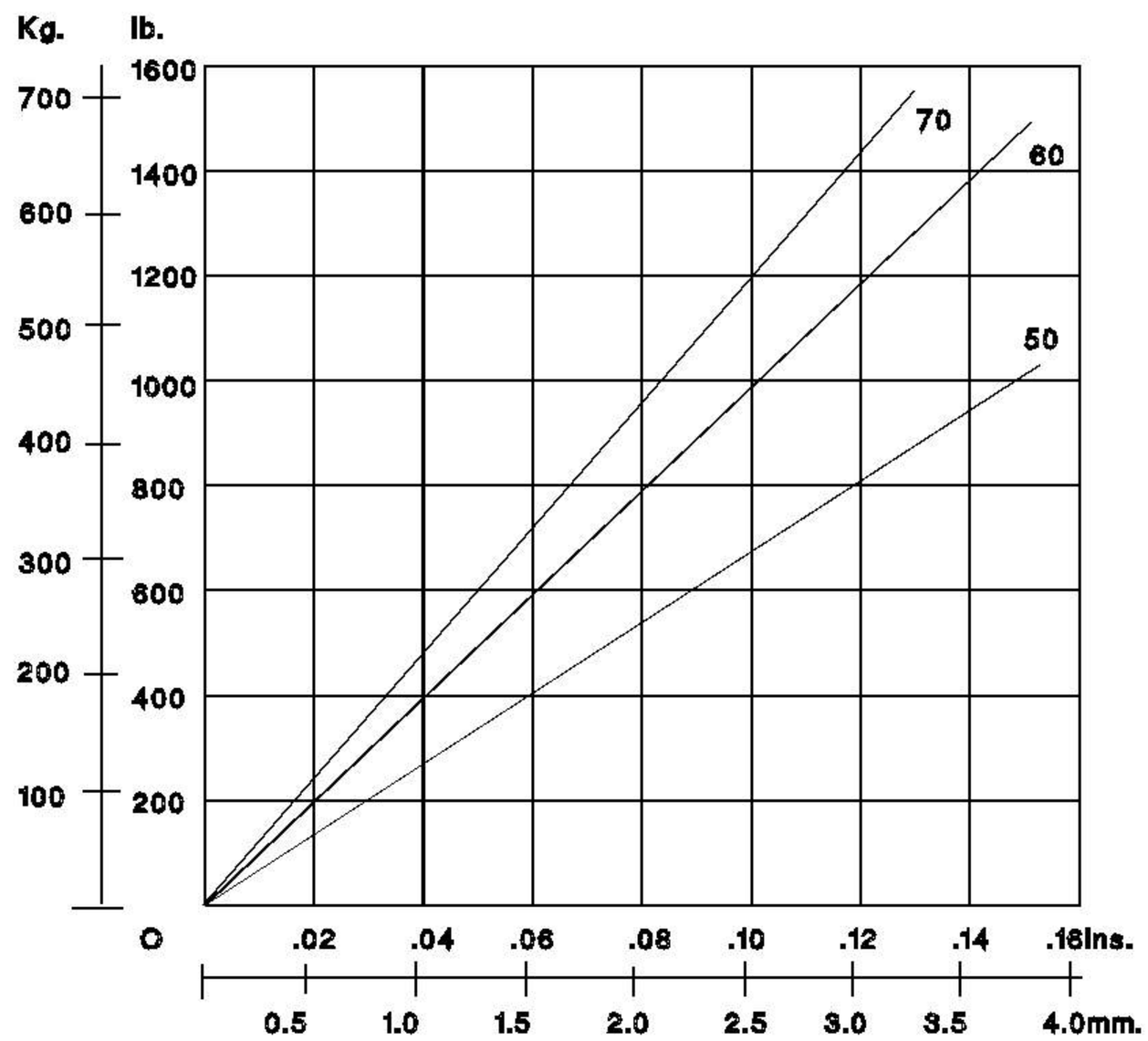

GRAPH : STATIC LOAD VS. DEFLECTION

© 1996

Drawing Number :P#10SM20
Drawn : P.E.B. 14/2/96