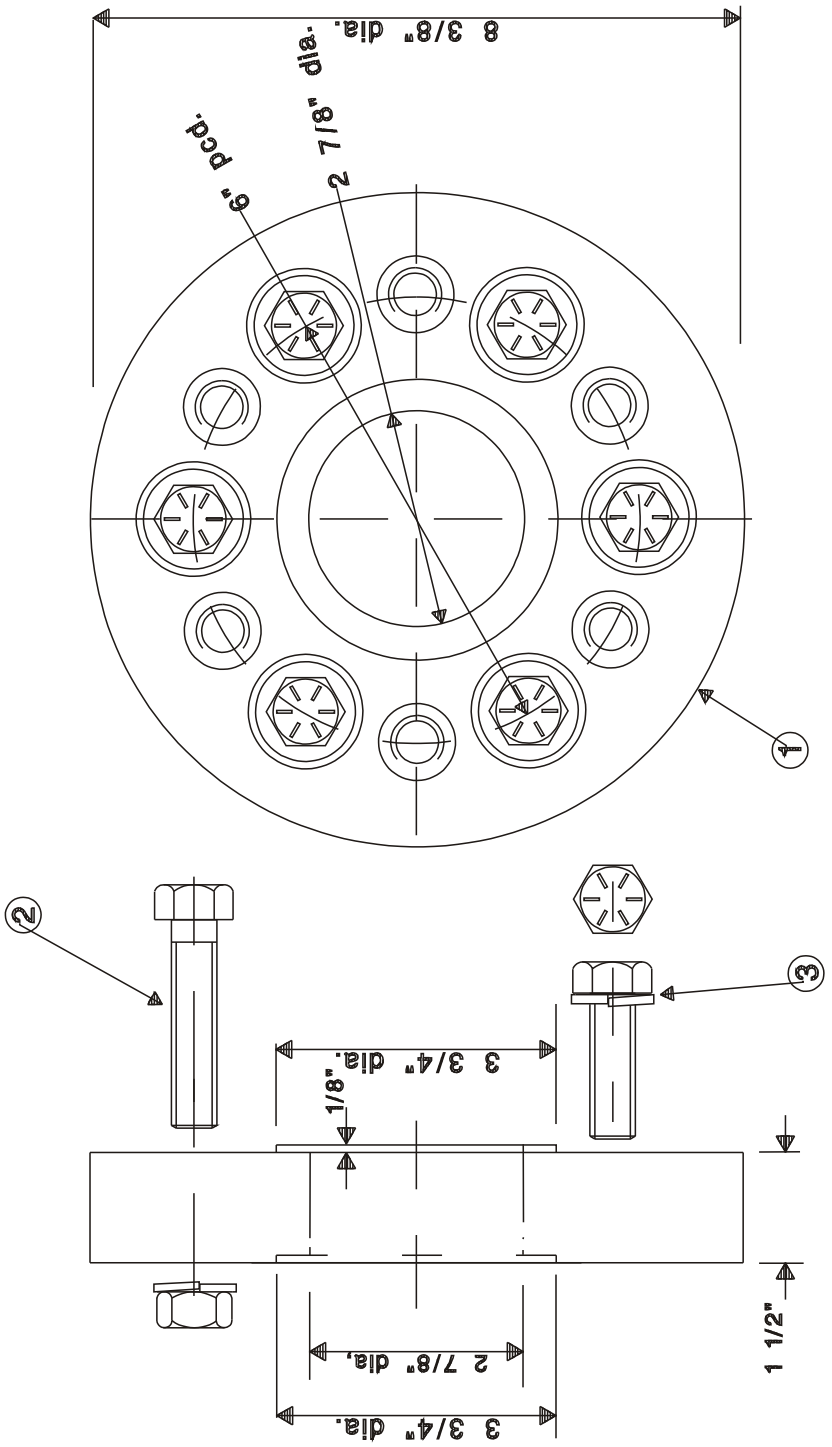

Poly Flex © 2001
Products

ITEM	DESCRIPTION	MATERIAL	NO. OFF
1	COUPLING DISC	ENG. GRADE POLYMER ALLOY (H/CURED)	1
2	5/8" UNC x 2 1/2" BOLT,NUT&S/W	BOLT GRADE 8 H/T,NUT&S/W TO SUIT	6
3	5/8" UNC x 2" BOLT&S/W	BOLT GRADE 8 H/T,S/W TO SUIT	6

Poly Flex Pty Ltd.

7206 5/8 Coupling ®

Drg No:C#720658

Drawn: PB. 16/7/01

Poly Flex
BRISBANE AUSTRALIA
A.C.N. 010 805 642

26-28 Tubbs Street, Clontarf, Queensland 4019. Australia.
Ph: 07-3284-2799 Fax: 07-3284-2672 : Int code prefix 617
Email: info@polyflex.com.au
Home Page: www.polyflex.com.au